BODENSTECKDOSEN SYSTEMTECHNIK

Floor sockets: 8904E-5-1

Specification:

Item No:	8904E-5-1
Product line:	Floor sockets
Units:	3
Mounting (qty):	2 x earthed socket 1 x Stove connection box
Construction:	Rectangular
Ground:	Suitable for screed
Type of inst.:	Flush mounted
Lid character.:	• Closable with plugged in plugs • Hinged • Removable • With brush outlet
Environment:	Indoor – dry to moist
EAN:	0706332887653

Technical data:

Protection class:	IP 10 (in unused condition) IP 10 (in used condition)
electr. Protection:	SK I
Material:	• Adapter box made of stainless steel (1.4301) • Lid made of stainless steel (1.4301) • Equipment carrier made of aluminum
Colour:	Stainless steel
Surface:	Grindet
Weight:	2,50 kg
Dimensions:	width: 205 mm height: 90 mm depth: 155 mm
Floor inst. depth:	90 mm
Height-adjust.:	30 mm
Supply line:	2 x lateral; 2 x back; 2 x bottom; each Ø 26 mm
Load:	120 kg

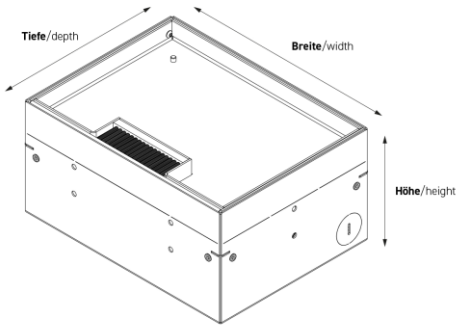

Features:

Opt. Accessory:	Item No. 12201 - Leveling kit for 8901 - 8908
Features:	Complete and pre-assembled

Errors and technical changes reserved.

BS Bodensteckdosen Systemtechnik GmbH
Dingerdisser Str. 36, D-33699 Bielefeld
Tel. 0521 989278 0
Fax 0521 989278 30
info@bodensteckdosen.com
www.bodensteckdosen.com

BODENSTECKDOSEN SYSTEMTECHNIK